IMPORTANT INSTRUCTIONS & OPERATING MANUAL

EF30R,EF36R,EF42R,EF50R
EF60R,WH,GY,EF72R,EF95R

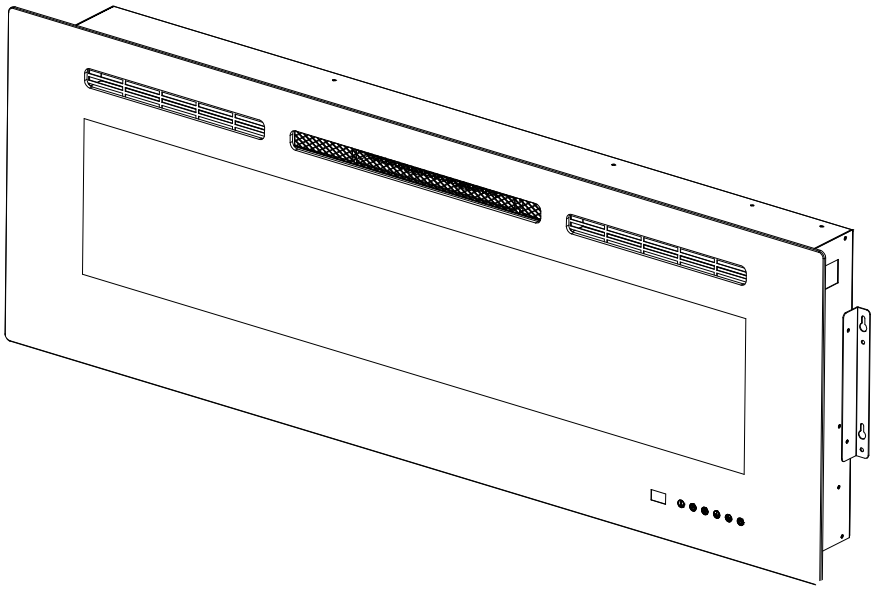

Plastic Tray (1 pcs)	**Drywall anchors** (8 pcs)	**ST4*40-Screws** (8 pcs)
Manual (1 pcs)	Remote control (1 pcs)	AAA battery (2 pcs)

⚠ **WARNING**	**Read and understand** this entire owner's manual, including **all safety information**, before **plugging in** or **using** this product. Failure to do so could result in **fire, electric shock, or serious personal injury.**

⚠ **CAUTION**	**Keep this owner's manual** for future reference. If you sell or give this product away, **make sure this manual accompanies this product**.

NO VENTING REQUIRED
220-240V AC;50 Hz; 2000 Watts

IMPORTANT: It is important to read these instructions carefully before using the appliance for the first time. Keep the instructions safe so that you can refer to them later if necessary.

【IMPORTANT INSTRUCTIONS】

1. Read all instructions before installing or using this heater
2. This heater is hot when in use. To avoid burns, do not let bare skin touch hot surfaces. Keep combustible materials, such as furniture, pillows, bedding, papers, clothes, etc. and curtains at least 0.9 m from the front of the heater and keep them away from the sides and rear.
3. Extreme caution is necessary when any heater is used by or near children or invalids and whenever the heater is left operating and unattended.
4. Do not operate any heater after it malfunctions. Disconnect power at service panel and have heater inspected by a reputable electrician before reusing.
5. Do not use outdoors.
6. To disconnect heater, turn controls to off, and turn off power to heater circuit at main disconnect panel (or operate internal disconnect switch if provided).
7. Do not insert or allow foreign objects to enter any ventilation or exhaust opening as this may cause an electric shock or fire, or damage the heater.
8. To prevent a possible fire, do not block air intakes or exhaust in any manner.
9. A heater has hot and arcing or sparking parts inside. Do not use it in areas where gasoline, paint, or flammable vapors or liquids are used or stored.
10. Use this heater only as described in this manual. Any other use not recommended by the manufacturer may cause fire, electric shock, or injury to persons.
11. This heater may include an audible or visual alarm to warn that parts of the heater are getting excessively hot. If the alarm sounds (or illuminates), immediately turn the heater off and inspect for any objects on or adjacent to the heater that may have blocked the airflow or otherwise caused high temperatures to have occurred. DO NOT OPERATE THE HEATER WITH THE ALARM SOUNDING (OR ILLUMINATING).
12. “SAVE THESE INSTRUCTIONS”

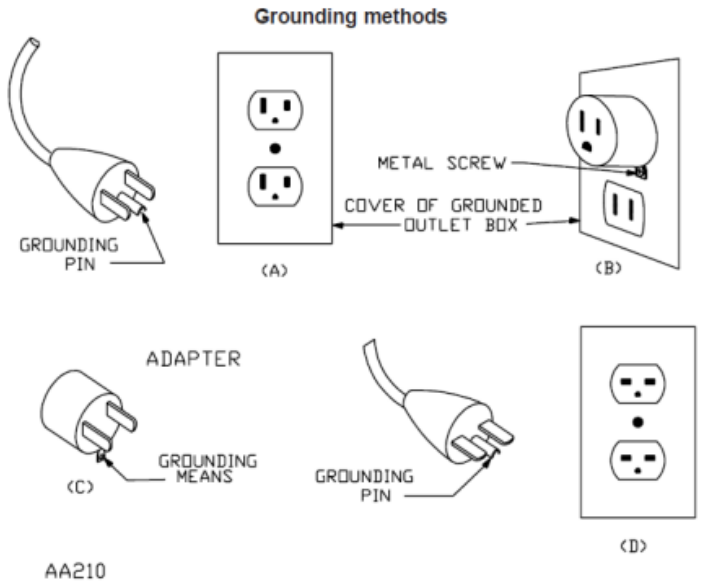

This heater is for use on 220 volts. The cord has a plug as shown below Figure. An adapter as shown at C is available for connecting three-blade grounding-type plugs to two-slot receptacles. The green grounding lug extending from the adapter must be connected to a permanent ground such as a properly grounded outlet box. The adapter should not be used if a three-slot grounded receptacle is available.

Instructions importantes

1. Lisez toutes les instructions avant d'installer ou d'utiliser ce radiateur.

2. Ce radiateur est chaud lorsqu'il est utilisé. Pour éviter les brûlures, ne laissez pas la peau nue toucher les surfaces chaudes. Gardez les matériaux combustibles, tels que les meubles, les oreillers, la literie, les papiers, les vêtements, etc. et les rideaux à au moins 0,9 m de l'avant du radiateur et éloignez-les des côtés et de l'arrière.

3. Une extrême prudence est nécessaire lorsqu'un radiateur est utilisé par ou près des enfants ou des invalides et chaque fois que le radiateur est laissé en fonctionnement et sans surveillance.

4. Ne faites pas fonctionner de radiateur après les dysfonctionnements. Débranchez l'alimentation au panneau de service et faites inspecter le radiateur par un électricien réputé avant de réutiliser.

5. N'utilisez pas à l'extérieur.

6. Pour déconnecter le radiateur, tourner les commandes vers OFF et désactiver l'alimentation sur le circuit du chauffage au panneau de déconnexion principale (ou faire fonctionner l'interrupteur de déconnexion interne s'il est fourni).

7. Ne pas insérer ou permettre aux objets étrangers de pénétrer dans une ventilation ou une ouverture d'échappement car cela peut provoquer un choc électrique ou un incendie, ou endommager le radiateur.

8. Pour éviter un éventuel incendie, ne bloquez pas les apports d'air ou ne vous échappez en aucune façon.

9. Un radiateur a des pièces chaudes et arc ou étincelles à l'intérieur. Ne l'utilisez pas dans les zones où l'essence, la peinture ou les vapeurs ou liquides inflammables sont utilisés ou stockés.

10. Utilisez ce radiateur uniquement comme décrit dans ce manuel. Toute autre utilisation non recommandée par le fabricant peut provoquer un incendie, un choc électrique ou une blessure aux personnes.

1. Ce radiateur peut inclure une alarme audible ou visuelle pour avertir que les parties du radiateur deviennent excessivement chaudes. Si l'alarme sonne (ou illumine), éteignez immédiatement le radiateur et inspectez tous les objets ou adjacents au radiateur qui pourrait avoir bloqué le flux d'air ou autrement provoqué des températures. Ne faites pas fonctionner le radiateur avec le sondage d'alarme (ou illuminant).

12. «Enregistrez ces instructions»

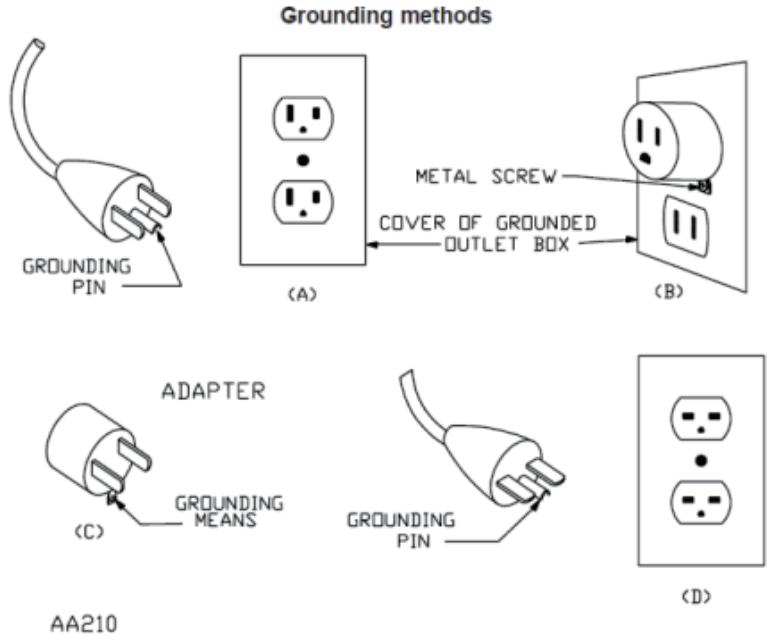

Ce radiateur est utilisé sur 220 volts. Le cordon a une fiche comme indiqué ci-dessous. Un adaptateur comme indiqué sur C est disponible pour connecter les bouchons de type de mise à la terre à trois lames aux réceptacles à deux plans. La patte de mise à la terre verte s'étendant de l'adaptateur doit être liée à un sol permanent comme une boîte de sortie correctement mise à la terre. L'adaptateur ne doit pas être utilisé si un réceptacle mis à trois places est disponible.

UNPACKING AND TESTING APPLIANCE

Carefully remove the appliance from the box. Prior to installing the appliance, test to make sure the appliance operates properly by plugging the power supply cord into a conveniently located 220-240 Volt grounded outlet.

【Grounding Appliance】

This appliance is for use on 220 Volts.For connecting three-blade grounding type plugs to three-slot receptacles. The green grounding lug extending from the adapter must be connected to a permanent ground such as a properly grounded outlet box. The adapter should not be used if a three-slot grounded receptacle is available .To disconnect appliance, turn controls to off, then remove plug from outlet.

WARNING:

Keep the front of the appliance through which the heat is radiated at least 1 meter away from furniture, curtains and other flammable objects at all time.Never use an extension lead. The mains cable must remain at the back of the appliance and must not be in contact with any hot elements.

【INSTALLATION】

WARNING:Find a safe location and build a suitable hole for fireplace.Minimum clearance from the ceiling and the mantel must be at least 8 inches(200mm); minimum clearance from the front must be at least 3 feet(900mm).Choose a location near an outlet so an extension cord is not required.

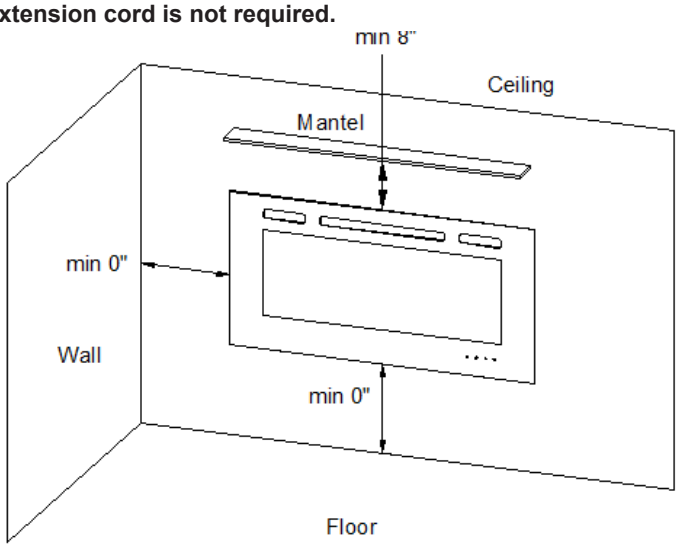

Take EF50R as a sample.Prepare a wall with a framed opening of 45.7 inch(1160 mm) wideX 17.05''**(433mm) high. Make sure the width of the wood block on both sides which used to fix the fireplace is 3''(76mm).Make sure that the revealed wood block width on both sides is about 1 1/2''(37.5mm) after finishing the plasterboard.Measure the depth D from the plasterboard surface to the wood block and write it down.**

M O DEL	EF30R	EF36R	EF42R	EF50R	EF60R,WH,GY	EF72R	EF95R
A	25.7 '' (652mm)	31.7'' (805 mm)	37.7'' 957 mm)	45.7 '' ((1160mm)	55.7'' (1414mm)	67.7'' (1720mm)	90.7'' (2303mm)

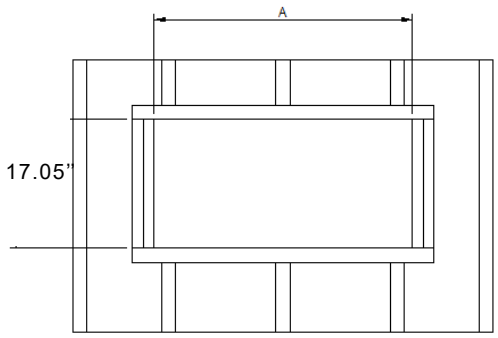

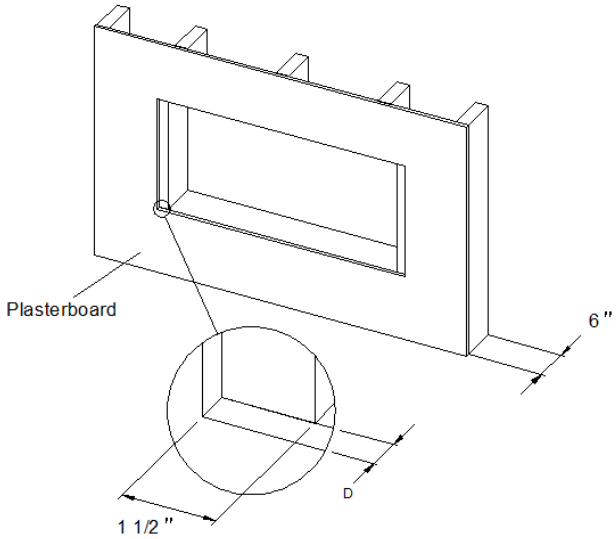

Before installing the in-wall fireplace,please read the following steps carefully.

1,Wall mounted functional fireplace.

Remove the two silver colored screws at both sides of the fireplace(See Step 1)

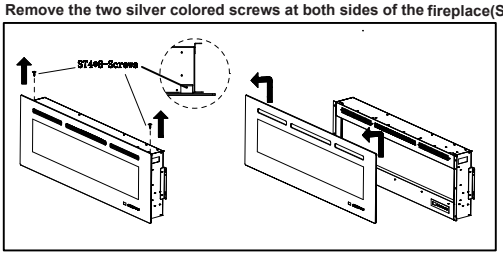

Step 1

Make the bulged screw tube onto the wall(Keep the screws with 5mm expose(See Step 2)

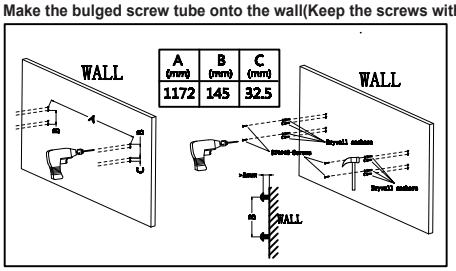

Step 2

Fix the fireplace onto the wall(See Step 3)

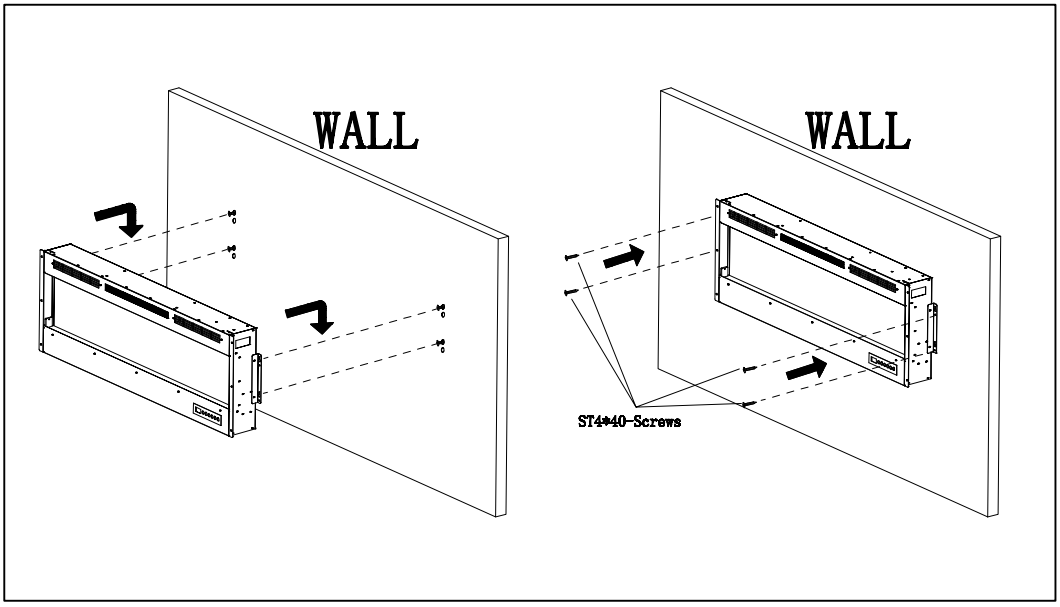

Step 3

Put the crystals into the plastic board,then wall hanging the glass onto the fireplace(See Step 4)

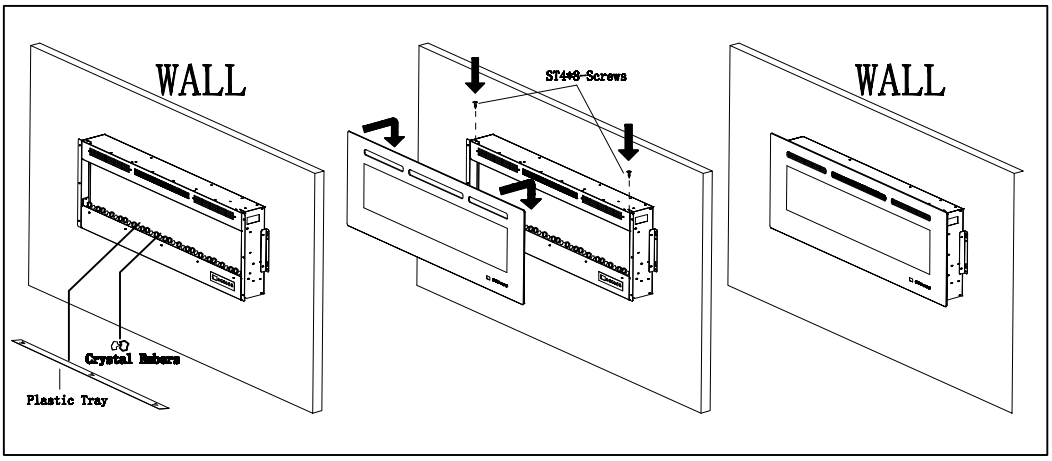

Step 4

Warning

This carton includes GLASS!ALWAYS use extrme caution when handing glass. Failure to do so could result in personal injury or property damage.

Warning

ALWAYS unplug this fireplace heater **before assembly** or **cleaning, or before relocating.** Failure to do so could result in **electric shock**, **fire**, or **personal injury**.

2,Recessed functional fireplace Installation.

Step 1: Take off the six silver screws,then remove the wall kit on the left and right side,and take off the tempered glass by two hands carefully,please check Figure A.

Figure A

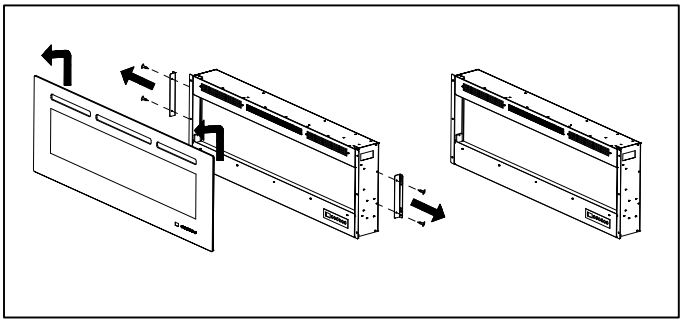

Step 2: Put the fireplace insert into the available hole,then fix the 6 screws on both sides.

Figure B

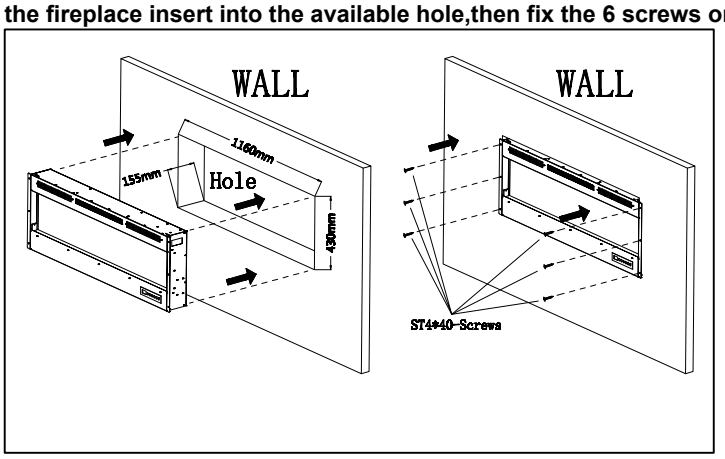

The next step requires installation of a Glass panel!The manufacturer recommends that two adults install, the glass panel.***Always use extrme caution when handling glass.Failure to do so could result in personal injury or property damage***,please see the **Figure (C).**

Carefully set both hooks of the front glass panel onto the firebox.Note:make sure the glass fully attached to the firebox so that the control panel can work properly.This will keep the decorative glass in place and enable the control panel work well.

Figure C

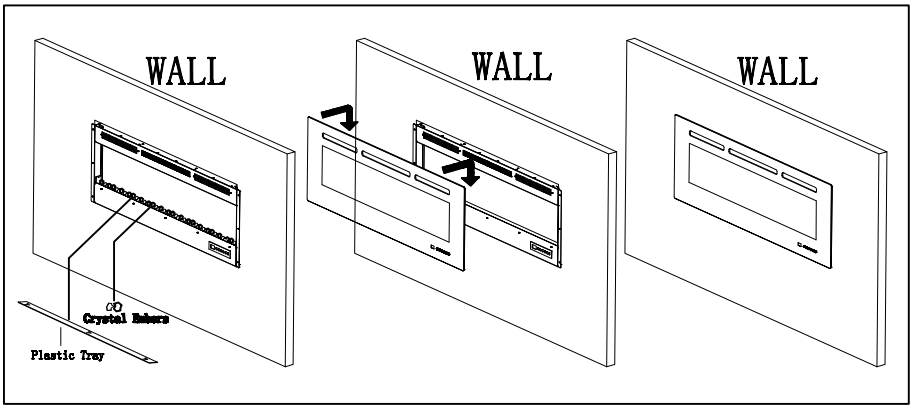

Note: Put the crystals on the plastic board as Figure C.

OPERATION

Read and understand this entire owner's manual, including **all safety information**, before **plugging in** or **using** this product. Failure to do so could result in **electric shock, fire, serious injury, or death.**

Power

Plug the power cord into a 220-240 Volt 15 Amp outlet.Make sure the outlet is in good condition and that the plug is not loose.NEVER exceed the maximum amperage for the circuit.DO NOT plug other appliances into the same circuit.

Temperature Limiting Control

This heater is equipped with a Temperature Limiting Control. Should the heater reach an unsafe temperature (212°F / 100°C), the heater will automatically turn OFF. To reset:

1. Unplug the power cord from the outlet.
2. Turn the ON/OFF switch on the CONTROL PANEL to OFF. **Wait at least 5 minutes.**
3. Inspect the fireplace to make sure no vents are blocked, or clogged with dust or lint. If they are, use a vacuum to clean the vent areas.
4. With the POWER switch in the OFF position, plug the power cord back into the outlet.
5. If it switches off again, **UNPLUG THE HEATER RIGHT AWAY!** Have the outlets, wiring, and breaker box inspected by a professional. Make necessary repairs before using the heater.

Heater Rating

Maximum Heat Output: 1500 W (5120 BTU); Maximum Heating Area: 400 square feet.

【Special characteristics of this Electric Fireplace】

1、The smouldering glow of the flames can hardly be distinguished from that of a real fireplace.
2、Produces the effect of a hot current of air.
3、Automatic and constant temperature control.
4、Fireplace can be both used as Build-in the wall
5、Fireplace exchanged freely from LOG and Glass Media
6、Perfect for small to mid-sized rooms
7、Timer (1hrs to 9hrs)
8、Operated with remote control and Manual Panel Switch
9、Dimmer (Five steps Flame adjust from Dimmer to Lighter)

【Safety instructions】

Only use the appliance in accordance with the instructions in this manual! It cannot be used for any other purpose.
Never operate the appliance when the appliance itself or the main cable show any signs of damage.
In order to avoid overheating, do not cover the heater.
Be responsible when handling the packing material. Warning: plastic wrapping may be lethal to children.
Do not place the appliance next to a socket.
Never operate the heater on a program switch, timer switch or any other appliance for automatic operation.
The heater is only suitable for indoor use.
Never use the heater in the bathroom, shower or near a swimming pool.
The heater must not be located immediately below a socket-outlet
If the supply cord is damaged, it must be replaced by the manufacturer or its service agent or a similarly qualified person in order to avoid a hazard.
Never leave small children unattended near the appliance.
In case of malfunction, disconnect the plug immediately.
When not in use for a considerable amount of time, unplug the appliance.
Components should only be serviced by an approved electro technician.

【To switch on】

Plug in the appliance into the socket. Turn on the **Power Switch**
The control **Switch Panel** is on the bottom of tempered glass panel**(See pic)**

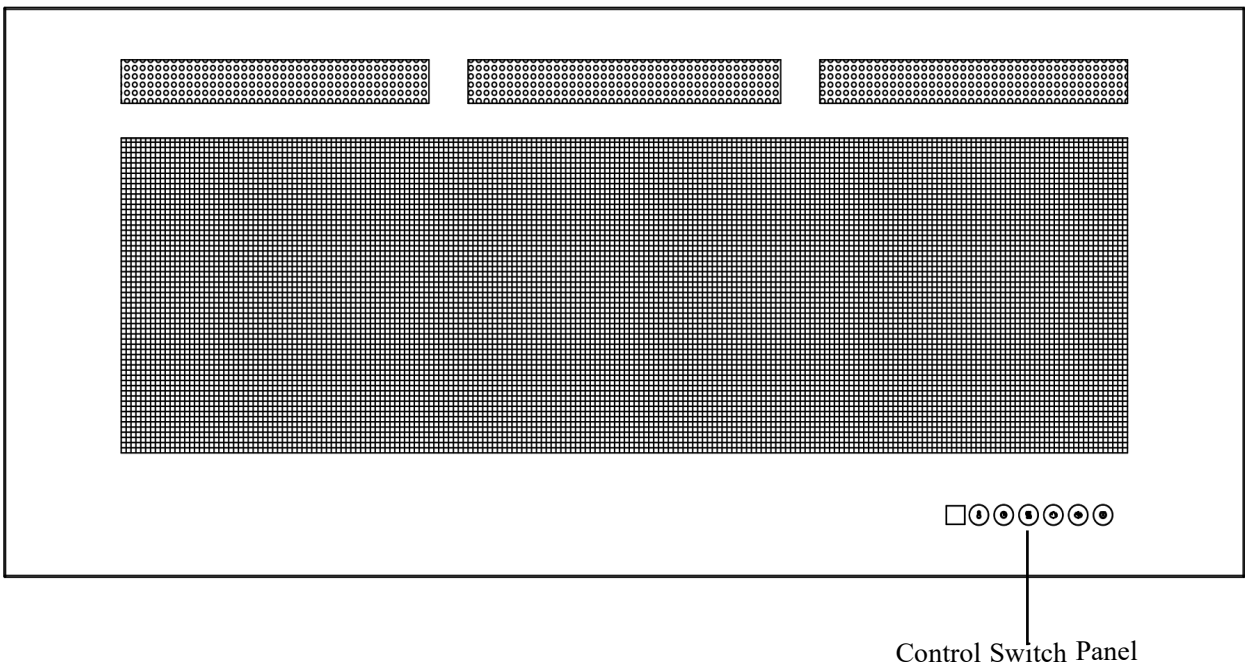

【Instruction for Remote Controller and Switch Panel】

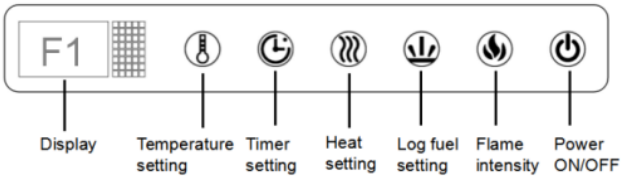

Control Panel / Remote Control Operation

(Control panel POWER switch must be ON to use remote control.)

The touch display panel is shown by LED's on the front bottom right of the appliance. The LED's will appear on the bottom of the fireplace control panel.

POWER		Turns the appliance ON/OFF.
FLAME		Controls Flame change. 13 colors : (F01-F02...F12-F13) Flame dims from F01 to F13. Cycle by cycle.
FLAME - Log		Controls Log Flame change. 13 colors :(C01-C02...C12-C13)Flame dims from C01 to C13. Cycle by cycle.
HEATER		Controls the Heater. Press button to initiate the heater. (OFF) no heater or blower. (LO), heater blows warm air (750W) (HI), heater blows hot air (1500W) **NOTE: Heater functions cycle from OFF-LO-HI**
TIMER		Controls the Timer. 9 Settings: (1h, 2h, 3h, 4h, 5h, 6h, 7h, 8h,9h) Press button until reach desired setting.
TEMPERATURE		1. **Press once:** Touch panel indicator becomes active. 2. Press again until desired setting is reached. Digital display shows setting circles as below.

Display Value		0	1	2	3	4	...	12	13	14	15	N
Temperature	°C	17	18	19	20	21	...	27	28	29	37	ON
	°F	62	64	66	68	69	...	80	82	84	99	ON

NOTE: Press the button for 10 seconds, the temperature setting will switch from °C to °F. Same way from °F to °C.

WARNING : Do not move or remove the mesh trim panel, when the appliance is plugged in and operating. This will cause the remote control and touch panel to no longer function.

NOTICE	When the heater is first turned on, a slight odor may be present. This is normal and should not occur again unless the heater is not used for a long period of time.

NOTICE	To improve operation, **aim** the remote control at the front of the fireplace. **DO NOT press the buttons too quickly**. Give the unit time to respond to each command.

Remote Control Battery Information

- This remote control uses **two AAA batteries (Not included).**
- Instructions for battery installation are on the Remote Control battery compartment.

NEVER dispose of batteries in **fire.** Failure to observe this precaution **may result in an explosion**. Dispose of batteries at your local hazardous material processing center.

Temperature Limiting Control

This heater is equipped with a Temperature Limiting Control. Should the heater reach an unsafe temperature, the heater will automatically turn OFF. To reset:

1. Unplug the power cord from the outlet.
2. Turn the ON/OFF switch on the CONTROL PANEL to OFF. **Wait 5 minutes.**
3. Inspect the fireplace to make sure no vents are blocked, or clogged with dust or lint. If they are, use a vacuum to clean the vent areas.
4. With the POWER switch in the OFF position, plug the power cord back into the outlet.
5. If the problem continues, have your outlet and wiring inspected by a professional.

Care and Maintenance

Cleaning

ALWAYS turn the heater **OFF** and **unplug the power cord from the outlet** before cleaning, performing maintenance, or moving this fireplace. Failure to do so could result in **electric shock, fire, or personal injury**.

NEVER immerse in water or **spray with water.** Doing so could result in **electric shock, fire, or personal injury.**

Metal:

- Buff using a soft cloth, slightly dampened with a citrus oil-based product.
- **DO NOT** use brass polish or household cleaners as these products will damage the metal trim.

Glass:

- Use a good quality glass cleaner sprayed onto the cloth or towel. Dry thoroughly with a paper towel or lint-free cloth.
- **NEVER** use abrasive cleansers, liquid sprays, or any cleaner that could scratch the surface.

Vents:

- Use a vacuum or duster to remove dust and dirt from the heater and vent areas.

Plastic:

- Wipe gently with a slightly damp cloth and a mild solution of dish soap and warm water.
- **NEVER** use abrasive cleansers, liquid sprays, or any cleaner that could scratch the surface.

CAUTION: sharp edges!

1. After installation, the power plug should be accessible.
2. If the power cord is damaged. It must be replaced by the manufacturer or its service agent or a similarly qualified person in order to avoid a hazard.
3. The heater must not be located immediately below a socket.
4. The appliance is not intended for use by young children or infirm persons. Young children should be supervised to ensure that they do not play with the appliance.
5. Do not use this heater in the immediate surroundings of a bath, a shower or a swimming pool.
6. In order to avoid overheating, do not cover the heater.

LIMITED WARRANTY

This warrants to the original purchaser that this product is free from defects in material and workmanship as of the date of purchase and that it will, under normal use and proper care, remain so for one year from the date of purchase. Missing or initially defective parts will be replaced free of charge during the period of this limited warranty. If parts are unavailable, comparable replacement of refund will be given. **The original dated sales receipt is required for all warranty claims.** This warranty does not cover damage which has occurred during transport from the point of purchase to the consumer's home. This warranty does not cover glass, light bulbs, batteries, transportation, labor, or other issues not associated with the manufacture of the product.

This product is for residential use only. Any and all commercial use of this product voids all warranties, and frees the manufacturer from all liability.

Read and understand all assembly and operating instructions, and all safety information and warnings, before use. The following will void this warranty: Damage caused from tampering with, modifying, or altering the fireplace insert in any manner; Damage due to incorrect assembly, improper care, misuse, or abuse; Damage from being used with the wrong power source; Water damage; Damage caused from this insert being used outdoors; Damage caused from this insert being used for excessive periods of time; Damage caused by the insert being used in a commercial application; Damage from use as a primary heat source; Other misuse or abuse not specifically listed herein.

This product is not intended to be used as a primary heat source. It is for supplemental heating purposes only.

Model: EF30R,EF36R,EF42R,EF50R,EF60R,WH,GY,EF72R,EF95R

Power supply:220V-50Hz
Power consumption: 2000W
Protection class: I
Light bulb: LED