ASSEMBLY INSTRUCTION

Model: DV8017 Model: Dining table

Thank you for purchasing this quality product,be sure to check all the packing materials carefully. When you received,please pay attention to the products,which may cause deformed during the shipment.

step 1:

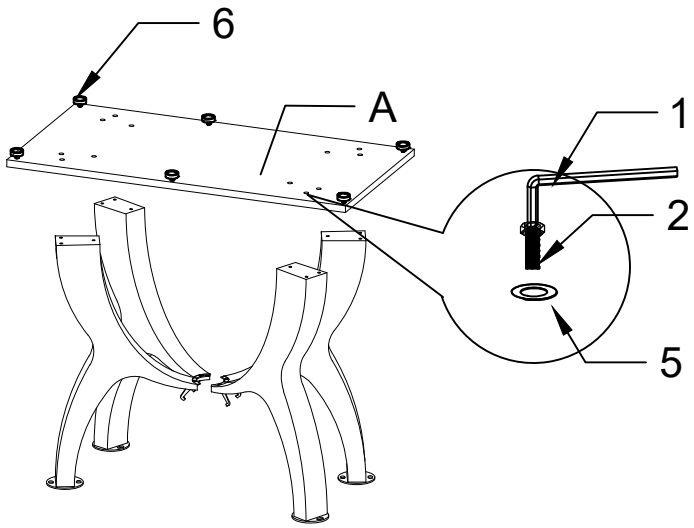

PART LIST

NO.	Designation	Quantity	Diagram
A	Stainless steel base	1	
B	Stainless steel pillar	4	
B	Table top	1	
C	Connection ring	1	
D	diamond	1	

HARDWARE LIST

NO.	Designation	Quantity	Size	Diagram
1	Allen key	3	M6 M5 M4	
2	Screw	12	M8*20	
3	Screw	4	M6*8	
4	Screw	8	M8*12	
5	Washer	20	Dia17mm	
6	Adjust leg	6	Dia20	

step 2:

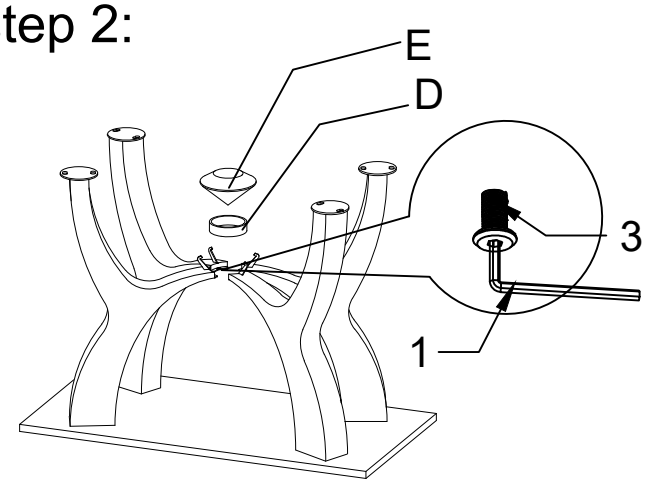

step 3:

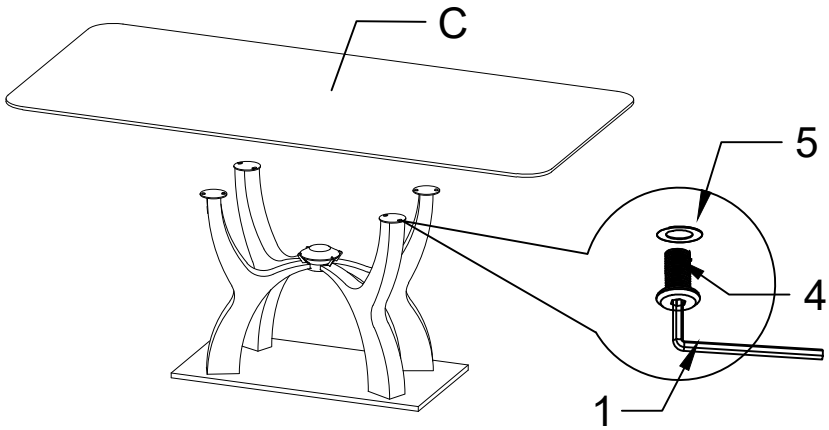

step 4:

