Duranor

Coat Rack

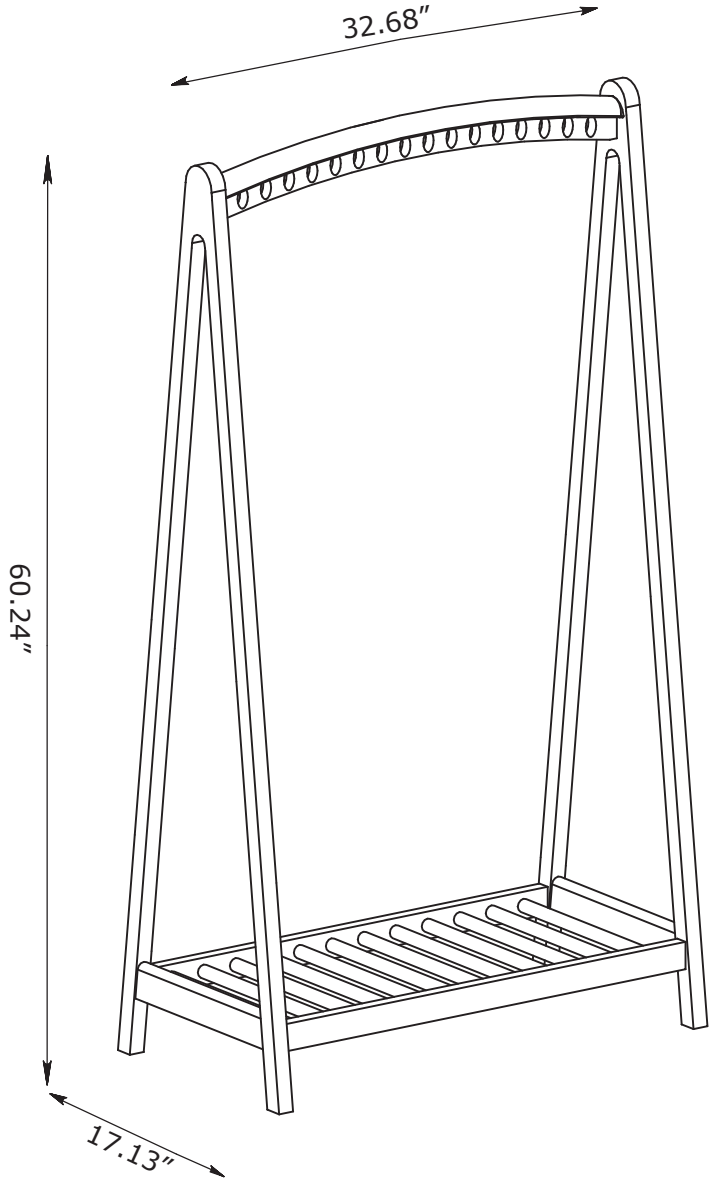

warning notice

- Open your item in the area you plan to keepit for less heavy lifting.
- Identify, sort, and count the parts before attempting assembly.
- Lay all parts on smooth flat surface.
- Make sure to always face the point on the top of the Cam Lock towards the outer edge.
- Do NOT use harsh chemicals or abrasive cleaners on this item.
- Never push, pull,or drag your furniture.
- Failure to use 2 people for assembly could result in unit damage or personal injury.
- Please fix all the screws provided for the back panel which can enhance productstability. If it is difficult to fix it when tightening, it can be fixed with the help of ahammer and then tightened

warning notice

WARNING – Tip-over Hazard
Furniture can tip over and cause serious injury or death.
Install the anti-tip hardware to the wall. Do not allow children to climb or hang on the unit.

California Prop 65 Warning
This product may contain chemicals known to the State of California to cause cancer and birth defects or other reproductive harm.

In order to avoid scratching this furniture should be assembled on a soft layer - could be a rug.

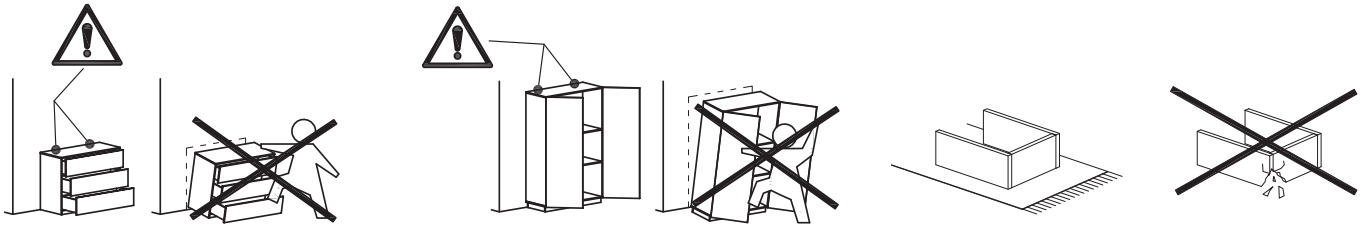



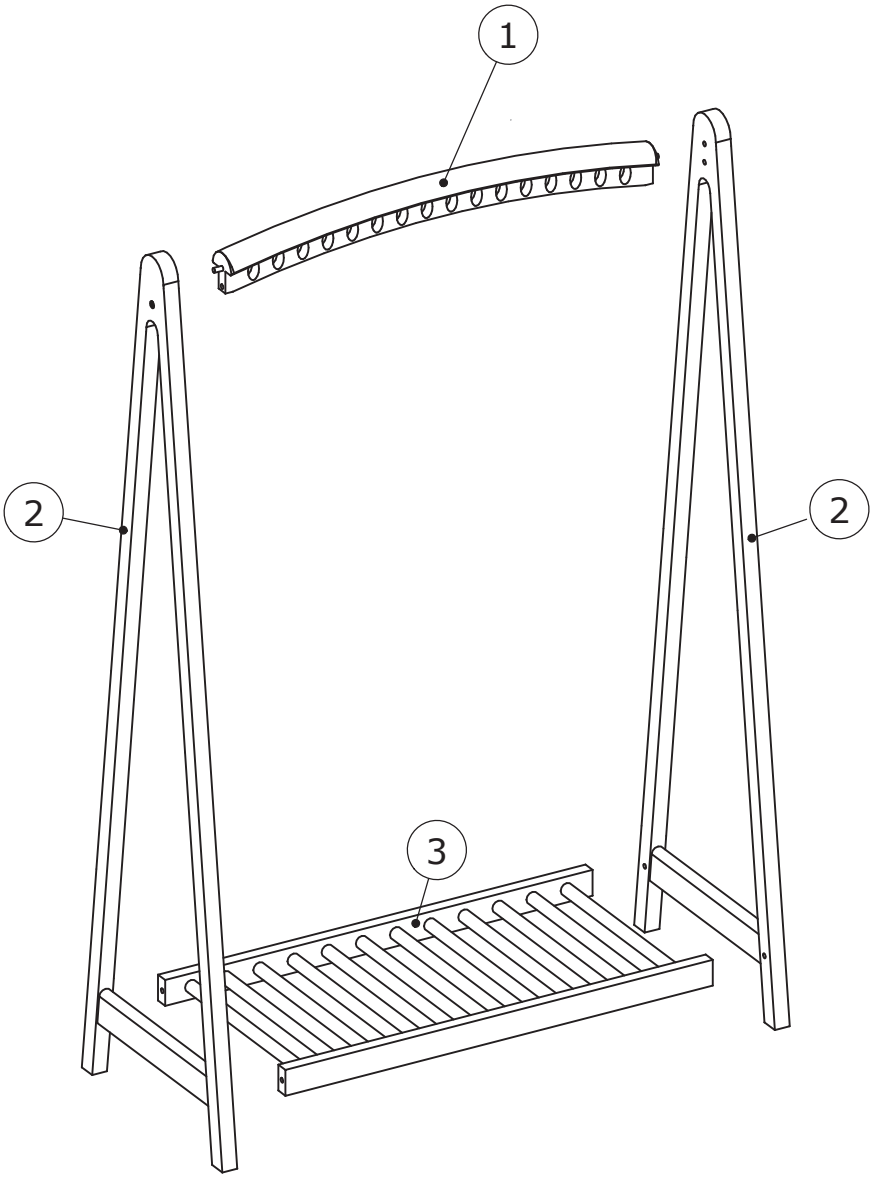
1
2
2
3

Box 1/1:

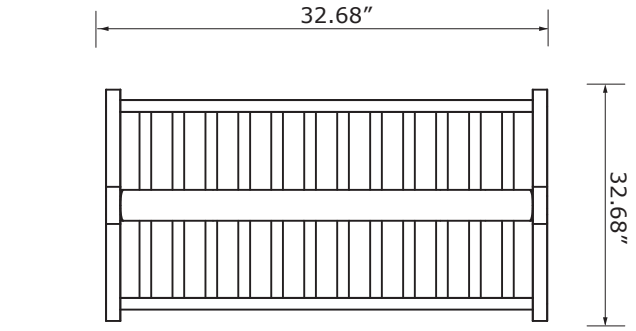

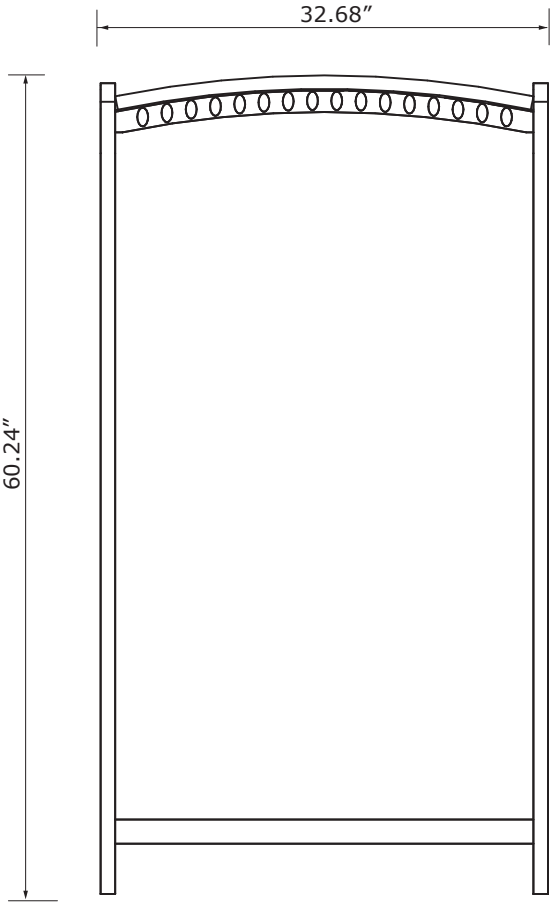

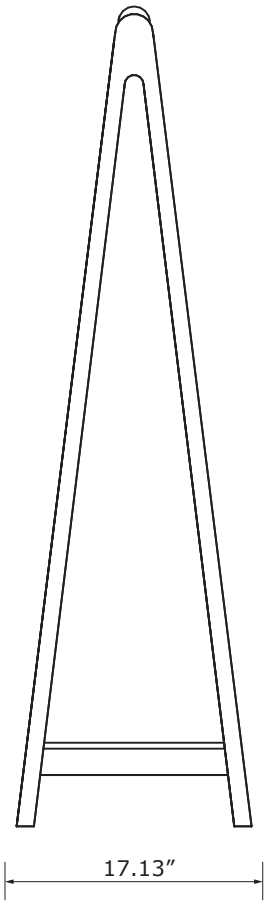

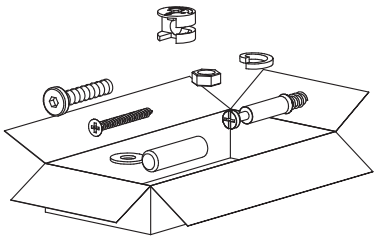

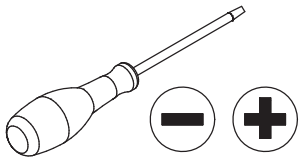

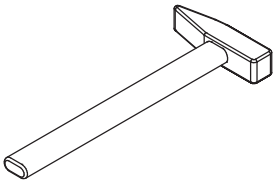

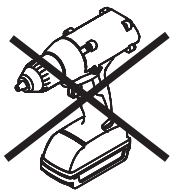

A x 6	B x 6
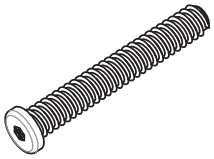	
M6 × 1.97"	Dia. 0.43" × 0.59"

1

A x 6	B x 6
	
M6 × 1.97"	Dia. 0.43" × 0.59"

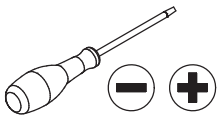

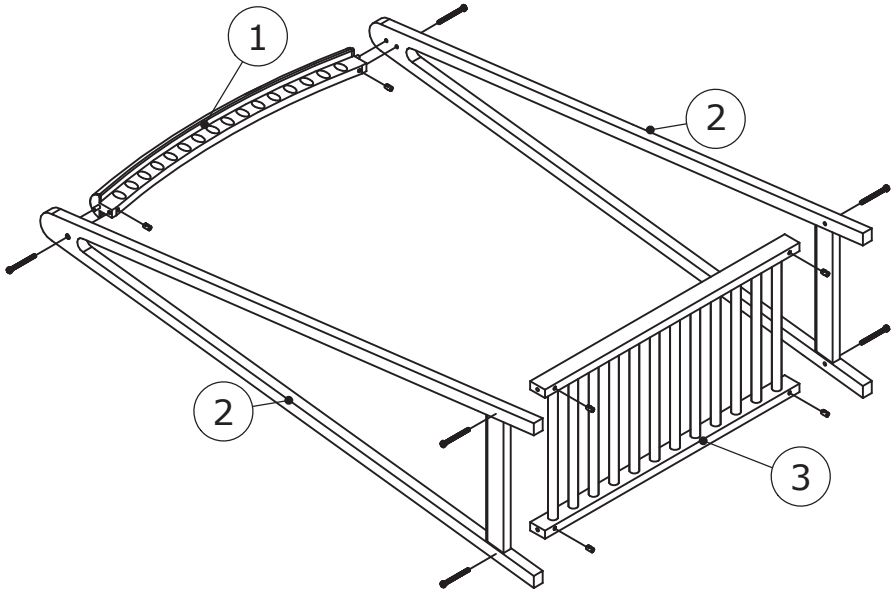

2

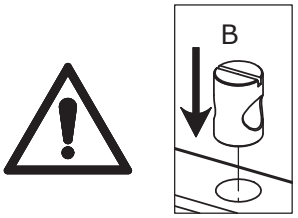

I

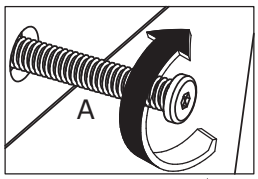

II

